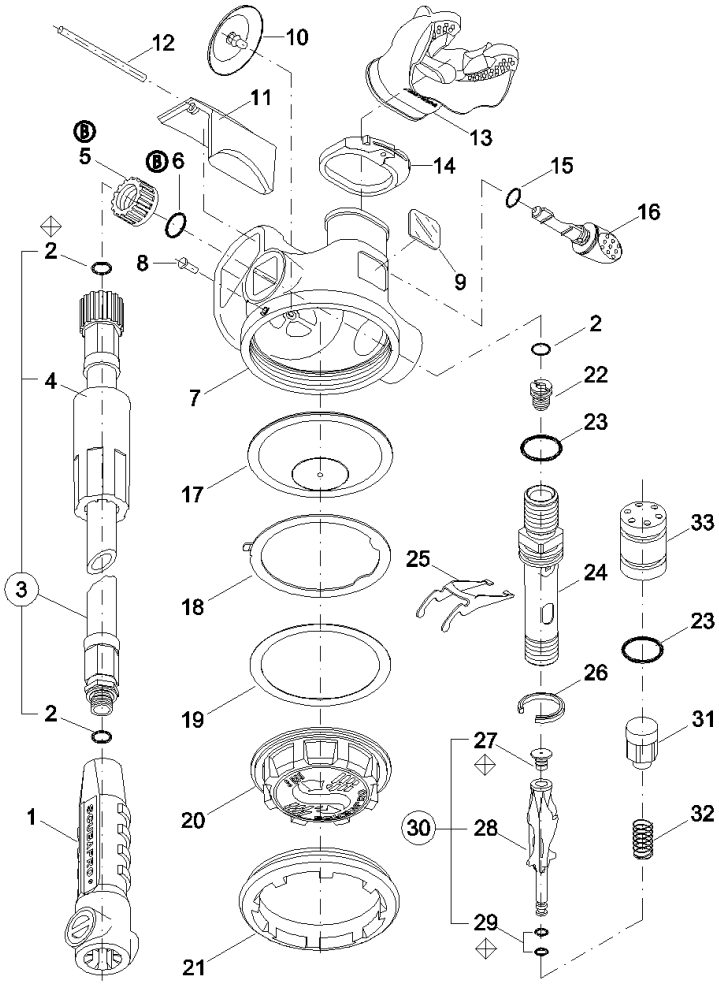


| Po. | P/N | DESCRIPTION | DESCRIZIONE | DESCRIPTION | BEZEICHNUNG |
|---|---|---|---|---|---|
| 1 | 11029100 | PROTECTIVE SLEEVE | TUBO PROTEZIONE | PROTECTEUR TUYAU | Knickschutz |
| 2 | 01050132 | O-RING | O-RING | JOINT TORIQUE | O-Ring |
| 3 | 01309030 | L.P. HOSE cm. 75 | TUBO B.P. cm. 75 | TUYAU M.P. cm. 75 | ND-Schlauch 75 cm. |
| 4 | 11500040 | SLEEVE HOSE | MANICOTTO | MANCHON TUYAU | Schlauchschutz |
| 5 | 11755120 | NUT, JAM UNIF. | GHIERA SEDE UNIF. | ECROU MOLETE | Mutter |
| 6 | 01050347 | O-RING | O-RING | JOINT TORIQUE | O-Ring |
| 7 | 11600006 | CASE | CASSA | BOITIER | Gehause |
| 8 | 01075131 | PIN, CASE | PERNO CASSA | PIVOT BOITIER | Nagel |
| 9 | 01006883 | DECAL V.I.V.A. | DECAL V.I.V.A. | DECAL V.I.V.A. | Signet V.I.V.A. |
| 10 | 11250103 | EXHAUST VALVE | VALVOLA SCARICO | SOUPAPE D'EXPIR. | Ausblaskappe |
| 11 | 11600007 | COVER EXHAUST | PORTELLO SCAR. | COUVER. DE SOUP. | Ventilkappe |
| 12 | 11190106 | PIN | SPINA | CLAVETTE | Sicherungsstift |
| 13 | 01040141 | MOUTHPIECE | BOCCAGLIO | EMBOUT | Mundstuck |
| 14 | 01040024 | CLIP, QUICK REMOV. | FASCETTA SG. RAPIDO | CLIP DE FIXATION | Mundstuck Clip |
| 15 | 01050126 | O-RING | O-RING | JOINT TORIQUE | O-Ring |
| 16 | 11500011 | FLOW VANE | DEFLETTORE | CORRECT. VENTURI | Regulierschraube |
| 17 | 11500012 | DIAPHRAGM ASSY | MEMBRANA COMPL. | MEMBRANE COMPL. | Membrane Komplett |
| 18 | 11500035 | WASHER, ANTIFRICTION | ANELLO MEMBRANA | RONDELLE MEMBRANE | Sicherungsscheibe |
| 19 | 11600050 | RING | ANELLO | RONDELLE | Scheibe |
| 20 | 11550010 | PURGE COVER | CALOTTA | COUVERCLE | Schutz |
| 21 | 11500037 | RING | GHIERA | BAGUE DE SERRAGE | Haltering |
| 22 | 11500109 | ORIFICE | ORIFIZIO | ORIFICE | Ventilsitz |
| 23 | 01050160 | O-RING | O-RING | JOINT TORIQUE | O-Ring |
| 24 | 11600022 | HOUSING | SEDE | LOGEMENT | Gehause-welle |
| 25 | 11600141 | LEVER | LEVA | LEVIER | Kipphebel |
| 26 | 11500031 | RETAINING CLIP KNOB | ARRESTO POMOLO | CLIP DE RETENUE | Sicherungsring |
| 27 | 11250221 | SEAT | VALVOLA | CLAPET | Ventil |
| 28 | 11250220 | POPPET | PISTONCINO | POUPEE | Ventiltrager |
| 29 | 01050363 | O-RING | O-RING | JOINT TORIQUE | O-Ring |
| 30 | 11250015 | POPPET ASSY | ASS. PISTONCINO | POUPEE ASSEMBLEE | Ventiltrager Komplett |
| 31 | 11150102 | BALANCE CHAMBER | CAMERA BILANC. | CHAMBRE COMP. | Balance-Kammer |
| 32 | 01020216 | SPRING | MOLLA | RESSORT | Feder |
| 33 | 11550015 | PLUG | TAPPO | BOUCHON | Verschluss |

< > Torque N·m $^{+2}_{-0}$

[ ] Torque lb·in $^{+18}_{-0}$

Annual replacement

O Octopus version

S-550 SECOND STAGE

CAT. NO. 11 550 000

| CONFIG. 1 | DATE 02 / 01 | 1 / 1 |
|---|---|---|

REV. B Modified pos. 5 (was P/N 11250106) and pos. 6 (was P/N 01050193)

CHECKED

SCUBAPRO